Public meeting planned on hazardous wastes

By Joseph Bauman 14 Nov 86
Deseret News environmental specialist

Utahns need to become much more aware of hazardous wastes, because of the danger of spills, and potential problems with incinerators and ground water pollution, according to organizers of a hazardous waste conference.

The meeting will be open to the public Friday and Saturday at the Christ United Methodist Church, 2375 E. 33rd South. Hours are 1-9 p.m. Friday and 9 a.m. to 4 p.m. Saturday.

Among speakers will be Hugh Kaufmann, a lawyer for the Environmental Protection Agency in Washington, and Penny J. Newman, chairwoman for the Concerned Citizens in Action, a community group in Glen Avon, Calif., that was formed as a result of concern about the Stringfellow Acid Pits.

"The total amount of hazardous wastes that are generated annually by treatment, storage or disposal in Utah is 3 million tons," said June Wickham of the Crossroads Urban Center, one of the conference sponsors. In 1980, the total was estimated as only 240,000 tons.

"We have about a thousand generators of hazardous waste in Utah," she said. They have 115 official transport vehicles.

"There are 88 facilities that treat, store or dispose of hazardous waste and there are 151 sites identified under the Superfund list in Utah." Superfund is the federally funded program to clean up dangerous chemical contamination.

In the past few weeks, industries have voiced interest in starting two high-temperature incinerator projects in Tooele and Box Elder counties. Because the EPA says dioxins should be incinerated, this could cause a lot of dioxin-contaminated material to be transported to the remote desert sites.

"People need to know what questions to ask if incinerators are going to be in their area," she said.

Kate M. Park, with the League of Women Voters of Salt Lake, said people may read about hazardous waste in the newspaper and have some understanding of the issues. But they don't realize the full extent of the threat.

"The picture, I think is a lot darker, and the probability for future severe problems is really great," she said.

LOCAL HEALTH DEPARTMENT/AGENCY
PUBLIC HEALTH SERVICE
PERFORMANCE PLAN

PUBLIC HEALTH SERVICE: Maternal Health

Wasatch County Health Department

LOCAL HEALTH DEPARTMENT/AGENCY--OUTCOME OBJECTIVE(S)

1. Decrease the infant mortality rate from 23.6 to 15.0 or less.

2. Provide Early Pregnancy Classes to 50 women in compliance with last years Maternal Health Contract.

LOCAL HEALTH DEPARTMENT/AGENCY--PROCESS OBJECTIVES

1. Provide ongoing Early Pregnancy Classes focusing on the following topic areas:

   fetal development
   nutrition and weight gain
   environmental and lifestyle hazards
   discomforts of early pregnancy
   rest and exercise
   the need for comprehensive prenatal care
   information on the advantages of breastfeeding.

2. Screen all women requesting the service, refer for prenatal care all women with third party payment sources or resources to enroll under personal pay status, to private physicians in the community. Collect statistical information on women unable to obtain care in the private sector for financial reasons. Screening includes pregnancy testing, perinatal risk identification, initial laboratory assessments, early pregnancy education and making an appointment for ongoing prenatal care with private providers in the community. Referral to other health department services including WIC, Early Pregnancy Classes and to other community resources such as Social Services and Mental Health is included. Tracking for followup in the postpartum and neonatal period will also be provided.

3. Provide packets of prenatal information to women enrolled in other health department programs.

4. Provide individual and group counseling to breastfeeding women in the community.

PUBLIC HEALTH SERVICE:

CHILD HEALTH PROPOSAL

LOCAL HEALTH DEPARTMENT/AGENCY--OUTCOME OBJECTIVE(S)

1. Fifty additional children will receive the well-child health services provided by Wasatch City-County Health Department during 1986.
2. 100% of children in need of immediate dental care will be provided access to such care. Immediate dental needs include: abscesses, fractured teeth and emergency dental caries. 100% of children will be provided access to fluoride supplements by mouth.
3. 100% of children under age 4 with vision greater than 20/40 or amblyopia will be provid access to optometric or opthamologic examination and services including eyeglasses. 100% of children over age 4 with vision greater than 20/30 will be provided access to optometric or opthamologic examination and services including eyeglasses.
4. 100% of children who are identified as having a hearing loss will be provided access to further evaluation and treatment.
5. 100% of children who are identified as having a speech defect will be provided appropriate Referral Services.
6. 100% of children identified as having an acute ear, nose or throat infection will be provided access to physician evaluation, medication and follow-up visit.
7. 100% of children who are identified as having a handicap or developmental delay will be provided appropriate Referral Services.

LOCAL HEALTH DEPARTMENT/AGENCY--PROCESS OBJECTIVES

1. Well child conferences will be conducted 4 times monthly.
2. Children in need of immediate dental care will be referred to local dentists who will be reimbursed for that care at the Medicad rate. Fluoride will be provided through contract with the local pharmacists for reimbursement.
3. Children in need of visual examination will be referred to local optometrists or opthamologists who will be reimbursed for that care including eyeglasses at the Medicaid rate.
4. Children in need of further audiologic evaluation will be referred to state audiologis or private physician, with reimbursement at Medicaid rates. Handicapped Children's Services may be utilized if indicated.
5. Children in need of speech therapy will be referred to Handicapped Children's Services
6. Children in need of medical attention for acute E.N.T. infections will be referred to local physicians who will be reimbursed for that care and one follow up visit as neede at the Medicaid rate. The cost of medications will be reimbursed directly to the pharmacy at the Medicaid rate.
7. Children with any handicap or developmental delay will be referred to Handicapped Children's Service.
8. Well child services will be provided on a sliding fee scale as established by the Stat All sources of reimbursement for treatment will be exhausted before the grant allocati is utilized. This includes private insurance, Medicaid, AFDC, and the County Indigent Program.

1.1.134 Fireplace: means all devices both masonry or factory built units (free standing fireplaces) with a hearth, fire chamber or similarly prepared device connected to a chimney which provides the operator with little control of combustion air, leaving its fire chamber fully or at least partially open to the room. Fireplaces including those devices with circulating systems, heat exchangers, or draft reducing doors with a net thermal efficiency of no greater than twenty percent and are used for aesthetic purposes.

1.1.135 Residential Solid Fuel Burners means: any residential burning device connected to a chimeny that burns solid fuel and includes fireplace inserts, wood stoves, wood burning heaters, coal stoves or similar devices used for aesthetics, cooking, or space heating purposes whose minimum design capacity is less than 150,000 BTU per hour (exclusive of outdoor barbecues or campfires).

1.1.136 Solid Fuel: means wood, coal, and other similar organic material or combination of these materials.

4.13 Emission Standards for Residential Solid Fuel Burners and Fireplaces.

4.13.1 Limitation on the Sulfur and Volatile Ash Content of Coal Sold for Direct Space Heating for Residential Solid Fuel Burners and Fireplaces.

A. After July 1, 1987, no person shall sell, distribute, use or make available for use any coal or coal containing fuel for direct space heating in residential solid fuel burners and fireplaces which exceeds the following limitations as measured by the American Society for Testing Materials Methods:

1. 1.0 pound sulfur per million BTU's, and

2. 12% volatile ash content.

B. Any person selling coal or coal containing fuel used for direct residential space heating within the State of Utah shall:

1. Provide written documentation to the coal consumer of the sulfur and volatile ash content of the coal being purchased, and

2. Maintain records for a two year period which shall be made available to the Executive Secretary upon request and will contain:

a. Indicate the quantities of coal or coal containing fuels sold for use in residential solid fuel burners.

b. Indicate the sulfur and volatile ash content of the coal or coal containing fuel sold for use in residential solid fuel burners.

4.13.2 Limitation on the Opacity of Emissions from Residential Solid Fuel Burners and Fireplaces.

A. Visible emissions from residential solid fuel burners and fireplaces shall be limited to a shade or density no darker than 40% opacity as measured by EPA Method 9, except for the following:

1. An initial fifteen minute start up period, and

2. A period of seven minutes in any one hour period in which emissions may exceed the 40% opacity limitation.

4.13.3 Residential Solid Fuel Burners Performance Standards.

A. Effective July 1, 1988 no person shall advertise for sale, offer for sale, or sell a new residential solid fuel burner in the State of Utah unless:

1. That particular model or configuration of residential solid fuel burner meets the performance standards contained in Section 4.13.4. B. of these regulations, or

2. That particular model or configuration of residential solid fuel burner has been certified or approved for use in other states that have established performance standards which have been determined by the Executive Secretary to be as stringent as the performance standards established by these regulations.

B. Emission Standards:

1. After July 1, 1988 no new residential solid fuel burner shall be advertised for sale, offered for sale or sold unless the seller can demonstrate to the Executive Secretary and the Executive Secretary concurs that emissions from the particular model or configuration of residential solid fuel burner whose minimum heat output is under 40,000 BTU's per hour, do not exceed 12 grams per hour of particulate matter and 200 grams per hour of carbon monoxide.

2. No new residential solid fuel burner with a minimum heat output of more than 40,000 BTU's per hour shall be advertised for sale, offered for sale or sold on or after July 1, 1988 unless the emissions do not exceed 15 grams per hour for particulate matter plus .4 grams per hour for each 1000 BTU's over 40,000 BTU's per hour, and 250 grams per hour of carbon monoxide plus 5 grams per hour for each 1000 BTU's over 40,000 BTU's per hour. Compliance with the limitation shall be determined using the test methods contained in 40 CFR 60, Appendix A, Methods 1 through 5 and 10, and Appendix G of these regulations or equivalent test methods as determined by the Executive Secretary. A test protocol must be submitted to the Executive Secretary for approval.

C. Labeling Requirements. After July 1, 1988 new residential solid fuel burners sold in Utah must be permanently labeled. The label shall be readily visible and permanently attached to the exterior surface of the residential solid fuel burner and shall contain the following information: date tested, test procedure used, manufacturer of the appliance, model design number, and emission rates in grams per hour of both particulate matter and carbon monoxide. The label must be legible and must be made of a material such as aluminum, brass, galvanized steel, or other metal of a thickness that will ensure the permanence of the label.

APPENDIX G

EMISSIONS MEASUREMENT
RESIDENTIAL SOLID FUEL BURNER

TEST FACILITY AND APPLIANCE INSTALLATION

DESCRIPTION OF TEST FACILITY

The testing will be conducted in an area with a height for atmospheric discharge of flue effluent at 15 ± 1 foot (4.6 ± 0.3m) above the top surface of the scale.

The flue exit shall have essentially the same pressure such that no artificial draft is imposed on the appliance.

The test chamber room temperature shall be maintained between 65° F and 90° F (18° C and 32° C) during the course of any test.

Air velocities within 2 feet (0.6m) of the test appliance and exhaust system shall be less than 50 feet/minute (0.25 m/s) without a fire in the unit.

APPLIANCE INSTALLATION FOR FREE STANDING STOVES

Unless specified differently by the manufacturers, the flue pipe shall be made of No. 24 gauge black steel and shall have an insulated metal solid pack type chimney above the particulate and combustion gas sample probe port locations with a minimum 1 inch (2.5 cm) solid pack material.

The flue shall extend to 15 ± 1 feet (4.6 ± 0.3m) above the platform scale on which the appliance is located. All flue pipe cracks or joints shall be sealed.

The appliance and parts shall be assembled and installed in conformance with the manufacture's published installation instructions.

TEST FUEL WEIGHT

The balance used to weigh the fuel shall be accurate to ± 0.1 pound (0.05 kg).

The appliance to be tested shall be centrally placed on a platform scale. The scale shall have a monitor or other feature such that the weight change of the fuel loads may be continuously displayed. The scale shall be capable of reading weights to 0.1 pound (0.05 kg) and shall have a tare feature.

FLUE GAS TEMPERATURES

Flue gas temperatures shall be determined with a thermocouple or other temperature sensing device at a height of 8 to 9 feet (2.4 - 2.7 m) from the top surface of the scale. The temperature sensing device shall be located in the center of the flue gas stream.

The temperature sensor and associated display and recording equipment shall have a resolution of 1° F (0.5^{o} C).

STOVE COMBUSTION TEMPERATURES

Radiation shielded thermocouple(s) or other equivalent temperature sensing device(s) shall be located in the primary and secondary (if applicable) combustion chambers to measure gas temperatures at a location where direct flame impingement on the sensing device does not normally occur.

TEST FUEL REQUIREMENTS

FUEL PROPERTIES

The test fuel shall be untreated, air dried Douglas fir lumber. Kiln dried lumber is not allowed. To insure positive identification of Douglas fir, species type is stamped D.F. on the lumber by the certified lumber grader at the mills. The oven-dried density range shall be 28.7 - 37.4 pounds per cubic foot (.46-0.60 gm/cm^3). The density shall be determined and reported for certification purposes.

The test fuel shall have a moisture content range between 16% and 20% on the wet basis (19-25% dry basis). Moisture content shall be determined by measurements made with a calibrated electrical resistance type moisture meter or other equivalent performance type meter. Note: To convert moisture meter readings from the dry basis to the wet basis: (100) (% dry reading) (100 + % dry reading).

Minimum performance specifications for accuracy of the moisture meter shall be $\pm$ 3% of reading.

Moisture content determination per load shall be an average of a minimum of three readings for each fuel piece measured parallel to the grain of the wood on three sides (end readings excluded). If an electrical resistance type meter is used, electrode penetration shall be to a one inch depth using insulated pins. Moisture content measurements shall be made within a four hour period prior to testing, and the test fuel shall be at room temperature.

No wetting of previously dried wood is allowed. It is recommended that the test fuel be stored in a temperature and humidity controlled room.

The test fuel shall be essentially free of knots, and free of any rotted or molded areas or other defects such as pitch seams.

The higher heat value of the fuel shall be determined by bomb calorimetry using ASTM Method D 3286-77 or D 2015-77. A composite sample from each piece of the test charge shall be analyzed and reported for each test fuel load.

TEST FUEL PIECES

The dimension of each piece of fuel (flanged lumber) shall conform to the nominal measurements of 2x4 and 4x4 lumber (1-1/2 x 3-1/2 and 3-1/2 x 3-1/2 in).

The flanged lumber dimensions will vary according to the appliance's firebox volume as indicated below:

Usable firebox volume (ft3)	Flanged lumber piece size (nominal inches)
1.5	2x4
1.5 3	2x4 approximately 1/2 weight of test fuel load 4x4 approximately 1/2 weight of test fuel load
3	4x4

Each flanged piece shall be constructed in a configuration to conform to the following requirements for spacer dimensions and spacing intervals: Spacers will be constructed from air dried Douglas fir lumber (meeting the fuel specifications in Section 4.1) 5 inches in length, 1-1/2 inches in width, and 3/4 inches in height (12.7 x 3.8 x 1.9 cm). The spacers are to be attached by uncoated ungalvanized nails or staples to the lumber flush with the ends of each piece such that a 3/4 inch (1.9 cm) extension of the spacer occurs at the width of each end of the log as illustrated in Figure No. 1.

An optional acceptable flanged fuel configuration has identical spacing intervals as indicated above, but with a greater spacer dimension in height as depicted in Figure No. 1. The optional spacer configuration must conform to the conditions specified above, and meet the 5 inches in length, 1-1/2 inches in width and 1-1/2 inches in height (12.7 x 3.8 x 3.8 cm).

The length of each piece of test fuel shall be of equal length and shall closely approximate 5/6 the length of the longest usable dimension of the firebox.

Test fuel pieces shall be arranged in the firebox in conformance with the manufacture's published written instructions and in a configuration which maintains air space intervals between the logs. The fuel shall be positioned so that the flanges are flat (parallel) to the floor of the firebox, with the flanged edges in contact (abutting each other). If loading difficulties result, some fuel pieces may be placed on edge. If the usable firebox volume is between 1.5 and 3.0^3 feet, alternating the piece sized in vertical stacking layers is required to the extent possible. For example, 2x4's shall be placed on the bottom layer in direct contact with the coal bed and 4x4's on the next layer, etc. (See Figure No. 1). Photo documentation of the loading configuration for each test cycle shall be provided.

Appliances of unusual or unconventional firebox design shall load the fuel in a configuration which maintains air space intervals between the flanged lumber and is in conformance with the manufacture's published written instructions. Any appliance that will not accommodate the loading configuration specified in Figure No. 2, must obtain approval of the Executive Secretary for loading configuration prior to testing.

Appliances that are designed to provide continuous feed pelletized or chipped fuel must prearrange an equivalent test criteria agreement with the Executive Secretary prior to testing.

LOAD SIZE

The initial fuel load and the test fuel charge shall be based on weight per usable firebox volume. The fuel loads shall be equivalent to seven pounds of fuel as fired per cubic foot (112 kg/m^3) of usable firebox volume $\pm$ 10%.

To avoid stacking difficulties, or when a whole number of fuel pieces does not result, all piece lengths may be adjusted uniformly to remain within the specified loading density.

Usable firebox volume means the entire volume of the (primary) combustion chamber less any volume where firewood could not reasonably be placed, such as areas restricted by baffles or firebrick. (See Figure No. 3).

APPLIANCE OPERATING PROCEDURE

PRE-TEST START-UP

The pre-test start-up phase is designed to bring the stove up to a stabilized operating temperature that is reflective of the heat output range required for the following test cycle.

Pre-test start-up will begin with ignition of kindling from a cold start with no charcoal residue in the firebox. A layer of cold wood ashes spread to a uniform depth of up to one inch in depth (2.54 cm) on the floor of the firebox or ash pan is optional. The kindling load shall consist of between 4-8 pounds (1.8 - 3.6 kg) of finely split Douglas fir with a moisture content range up to 20% on the wet basis. Crumpled newspaper balls loaded with the kindling shall be used to help attain ignition. The air supply controls may be adjusted per the manufacture's published instructions for the kindling start-up phase.

After 50 - 75% of the kindling by weight has been consumed, a pre-test fuel load shall be added. The pre-test fuel load shall meet the same fuel species and moisture content specifications as the test load. The pre-test fuel load shall consist of whole 2x4 lumber pieces, without flanges, that are no less than 1/3 the length of the test fuel. Additional fuel may be added provided it meets the above requirements and that uniform charcoalization and weight specifications are adhered to before the test cycle begins.

The air inlet supply setting may be set at any position desired which will maintain combustion of the pretest fuel load. It is recommended that the air inlet supply setting be set at the position necessary to achieve the lowest heat output level of the following test cycle and be set at least one hour prior to addition of the test fuel load.

To document stabilized appliance heat storage effects and to control heat output levels, surface temperatures shall be recorded at each 5 minute interval during the one hour period prior to charging the test fuel.

TEST FUEL LOADING

When the kindling and pre-test fuel load has been consumed to leave a weight equal to 20-25 % of the test fuel load, the test fuel load shall be charged. Manipulation of the hot coal bed prior to charging the test fuel load shall conform to the manufacture's published written instructions. In the absence of written instructions, breaking up, raking and uniform spreading of the embers or hot coal bed is required prior to addition of the test fuel load. No manipulation or rearrangement of the test fuel load configuration is allowed during any portion of the test cycle.

Additional fuel may be added between the test cycle intervals, provided it meets the fuel species and moisture content specifications. Whole 2x4 lumber pieces, without flanges, no less than 1/3 the length of the test fuel may be used, provided proper re-establishment of the hot ember bed is controlled to the specified weight criteria and uniform charcoalization of the ember bed is adhered to.

AIR SUPPLY CONTROL

Adjustment of the primary air supply controls or holding the fuel loading door open up to the first 5 minute phase of the test cycle is allowed to insure good ignition of the test charge and catalyst if so equipped. Adjustments should be conducted per the manufacture's published written instructions.

TEST CYCLE COMPLETION

A test cycle ends when the entire weight $\pm$ 0.1 lb (.045 kg) of the test fuel load has been consumed, (i.e., when a bed of coals equal to the beginning coal bed weight remains).

OTHER APPURTENANCES

Shaker grates, by-pass handles, or other appurtenances (not primary air supply controls) may be adjusted one time only during each test cycle in accordance with the manufacture's written published instructions, and all adjustments shall be recorded.

CATALYTIC COMBUSTOR DESIGN CRITERIA

To insure equivalent performance of catalytic combustors used in testing versus production model stoves, a combustor model number for every catalytically equipped stove evaluated for certification shall be supplied. The model number will serve to identify catalytic combustor types by brand (manufacturer), dimensions, and design (substrate and coating material). The model number must be imprinted or inscribed on a readily visible surface (such as a metal sleeve or canned surface). This will allow for field verification monitoring. Any change in combustor brand, size and design type will require retesting of the appliance with the new combustor model for performance change unless test data or sufficient information can be provided demonstrating equivalent or improved performance.

TEST FUEL SIZE

Usable Firebox Volume (Ft.^{3})	Size-Flanged too Nominal inches
≤ 1.5	2 x 4
>1.553	Combination: 2 x 4 approximately 1/2 weight of test fuel load; 4 x 4 approximately 1/2 weight of test fuel load
>3	4 x 4

Maintain 7 lb per cubic foot ± 10% of usable firebox volume = load density

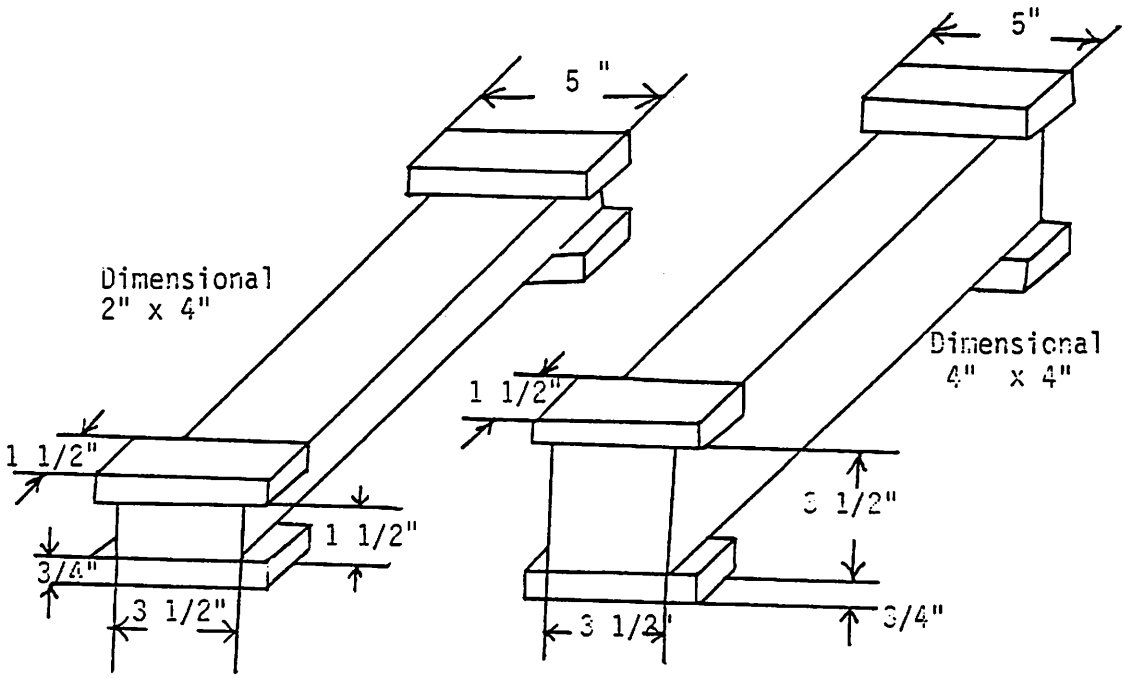

Scale 1/4" - 1"
Length will vary depending on length of firebox

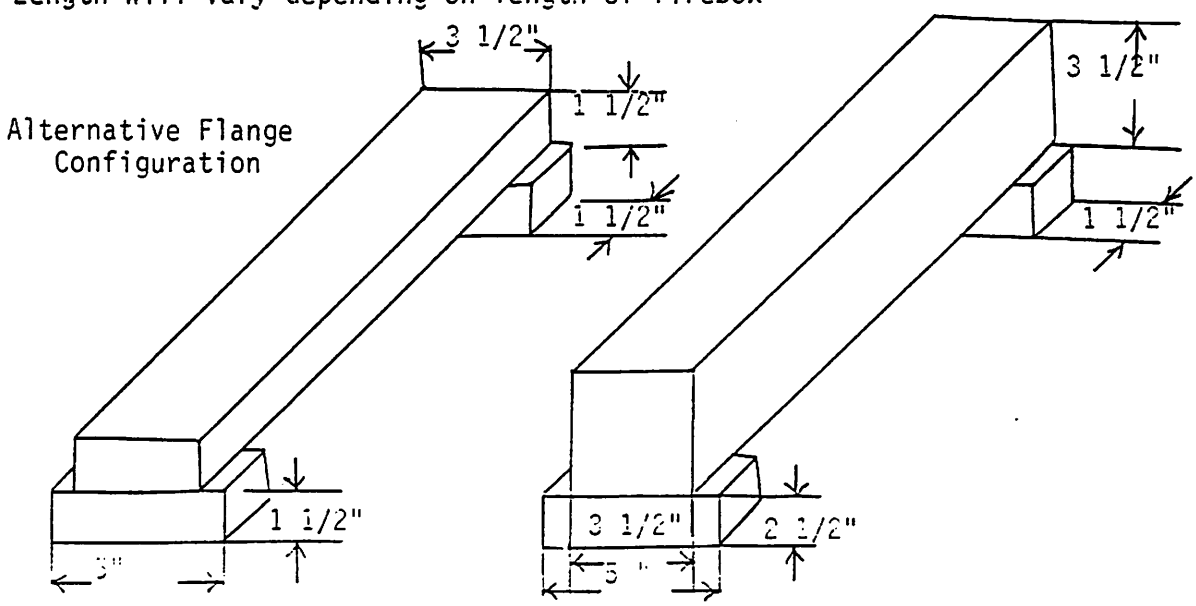

FIGURE NO. 1

WOODSTOVE STACKING & LOADING EXAMPLES

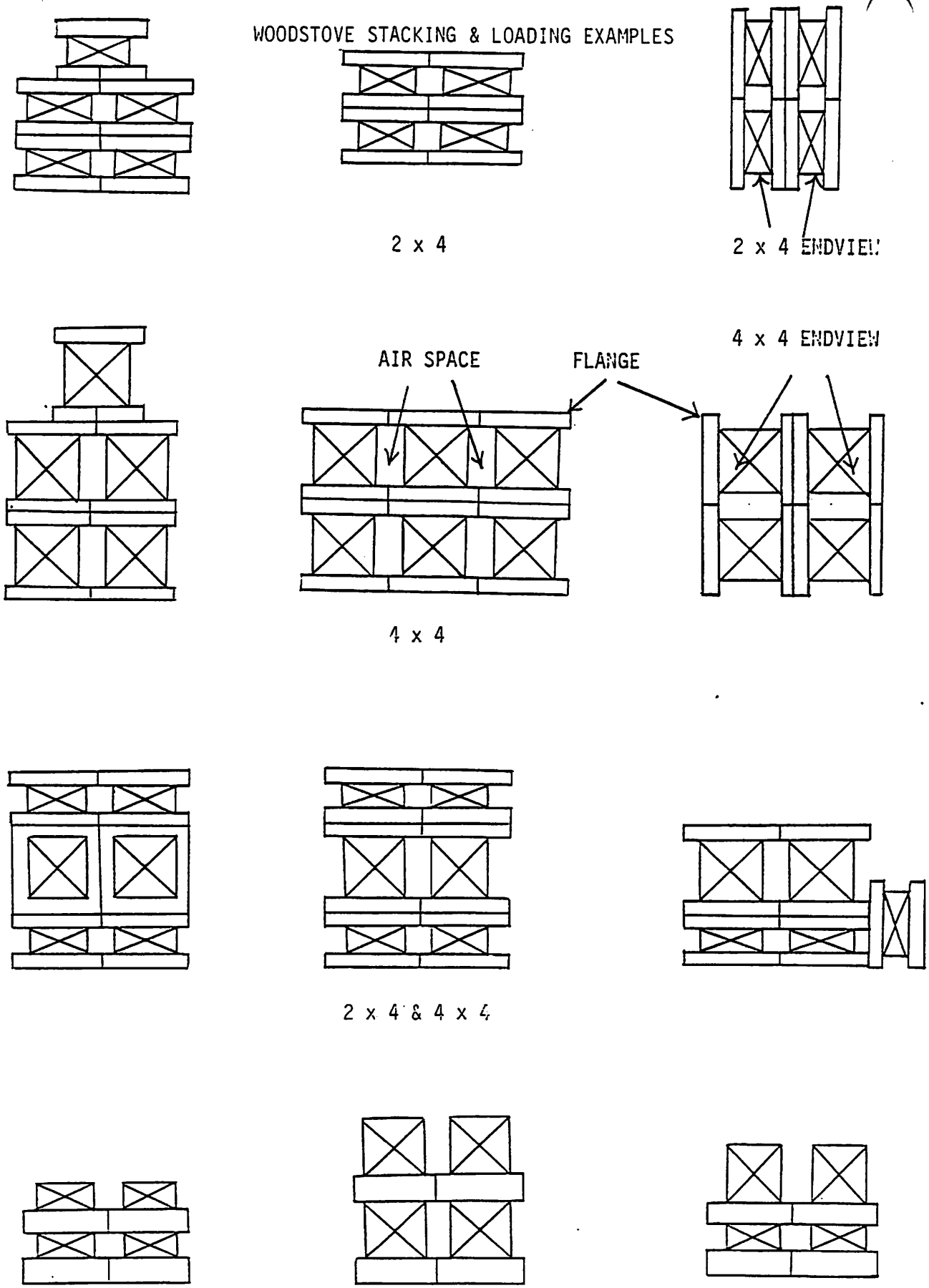

ALTERNATIVE FLANGE CONFIGURATION

FIGURE NO. 2

EXAMPLE OF

USABLE FIREBOX VOLUME

(Designated by Shaded Area)

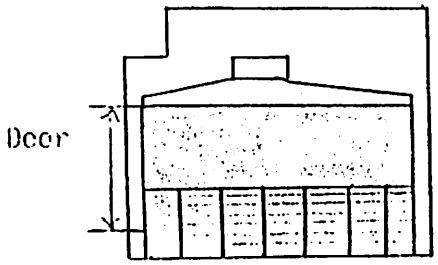

SIDEVIEW

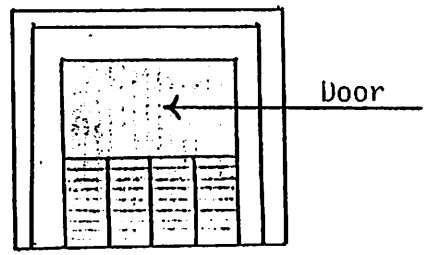

FRONTVIEW

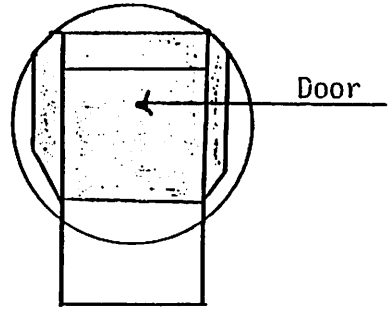

SIDEVIEW

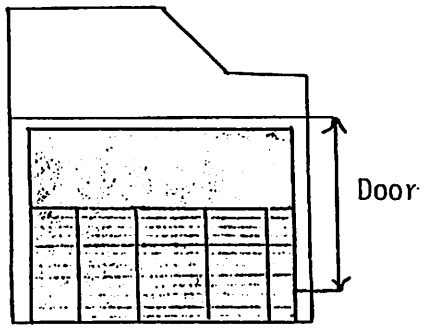

SIDEVIEW

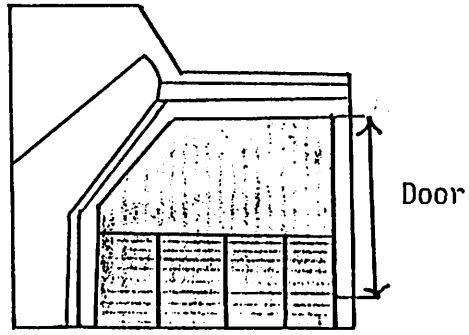

SIDEVIEW

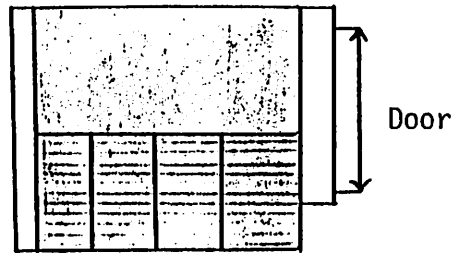

SIDEVIEW

FIGURE NO. 3

WASATCH CITY-COUNTY HEALTH DEPARTMENT

805 WEST 100 SOUTH
HEBER CITY, UTAH 84032
PHONE (801) 654-2700

November 17, 1986

Dr. Suzanne Dandoy
Executive Director
State Health Department
288 North 1460 West
P.O. Box 16700
Salt Lake City, Utah 84116-0700

Dear Dr. Dandoy,

As a small local health department we are very upset and concerned over your decision to abolish the Bureau of General Sanitation. They have provided valuable service to our health department. We have had the feeling since you were appointed the State Health Director, that you had very little concern about environmental health issues and this move seems to bear that assumption out. What good will MCH services, preventative health services, community health services, etc. do if we do not have adequate sewage disposal, water supply, food service safeguards and the like.

Small health departments do not have enough manpower or expertise to be consultants and experts on all items dealing with environmental health issues. Who is going to be responsible for plan review of swimming pools? What about alternate sources of individual waste water disposal? Who will make code interpretation on questions arising on the food code? Who will help insure that regulations are being equally enforced throughout the state (which incidentely is a major concern of industry)? The list goes on.

The local health departments have probably relied as much on the Bureau of General Sanitation as any other bureau in the state health department, and we feel that the demise of this bureau is an insult and that an overwhelming burden is being placed on local health departments. We feel that environmental health has taken a giant step backward in the state health department and a giant leap backward for the people of Utah.

Wasatch City/County Health Department Schedule

11-26-86

December

2 — WIC (by appointment)
3 — WIC, Nutrition Education (by appointment)
4 — Immunization Clinic, 10:00 a.m. to 1:00 p.m.
Blood Pressure Clinic 2:00 p.m. to 4:00 p.m.
Food Handlers Class, 5:00 p.m.
5 — Well Child Clinic (by appointment)
9 — WIC (by appointment)
10 — Early Pregnancy Class 7:00 p.m.
11 — Well Child Clinic (by appointment)
16 — WIC (by appointment)
17 — Food Handlers Class, 5:00 p.m.
18 — Immunization Clinic, 5:00 to 7:00 p.m.
19 — Well Child Clinic (by appointment)

Utah

Saturday, December 20, 1986

Teen suicides stun north Utah community

By JoAnn Jacobsen-Wells
Deseret News staff writer

CLEARFIELD — A rash of teen suicides in and around this northern Utah community has bewildered law officials, devastated the victims' families and classmates and frightened parents of other teenagers struggling with the pressures of growing up.

There have been six deaths since November. All have been investigated as possible suicides, but official determinations as such have not been made in some of the cases.

Five of the victims were boys: one 19, two 17 and two 15. The other was a 15-year-old girl. Four of the boys died of gunshot wounds. The other boy and the girl died of chemical poisoning.

Three of the teens were classmates at Clearfield High School, but law enforcement officials agree there is no apparent link between the deaths, despite a rumor to the contrary.

The string of deaths has stunned the communities. Everyone is hoping they've seen the last of the tragedies.

"This is probably the highest concentration in a short period of time in an area this small that I've ever observed," said Dr. Noel Gill, Davis County mental health program coordinator for children and youth.

"I've been in Davis County for six years, and nothing like this has come to my attention."

Gill, who spoke to a small group of students at Clearfield High School earlier this week, said he can't validate the rumor that the students were signing a suicide pact. The deaths seem to be separate. Alcohol, drugs and heavy metal music do not appear, as some have suggested, to have been contributing factors.

"But it is really too early to speculate," he said. "As yet, there hasn't been a coordinated effort to investigate what common factors were involved. This needs to be done."

Clinton Police Detective Brian Wallace investigated the first death Nov. 9 when a 15-year-old Clinton boy shot himself with his shotgun while pheasant hunting.

The medical examiner ruled the incident a suicide. But Wallace said that because there was a lack of strong evidence — such as a suicide note, deep depression, previous attempts or talk of suicide — many people, including the boy's family, insist the death was accidental.

A second death occurred two weeks later in West Point when a 17-year-old girl was found in the garage of her home in a vehicle that had been left running. The medical examiner said the cause of death was carbon monoxide intoxication. The reason it happened at all has not been determined.

A third death occurred in Ogden on Nov. 30. Ogden City Police Lt. Dave Reed said a 19-year-old put a white plastic bag over his head and then filled it with gas from a propane canister.

Please see SUICIDE on B-2

SUICIDE

Continued from B-1

The officer said the young man had married earlier in the year. But in December he was unemployed and separated from his pregnant wife. He had planned to join the Air Force, but didn't.

A 15-year-old Clearfield boy was the fourth reported death. Clearfield Police Chief Daren Green said the youth died Dec. 8 of a self-inflicted gunshot wound. He would give no other details.

A note was left by a 17-year-old Roy High School student who shot himself in the head with a hunting rifle on Dec. 12. His was the fifth reported death. The note to his parents read, "Mom, Dad, I'm sorry I let you down," said Roy Police Lt. Doug Rochelle.

The last person to see the boy alive was his stepmother, who had talked to him about midnight, the lieutenant said. The boy was found in his room about 6 a.m. by an older brother. Rochelle said no motive has been discovered for the shootings except that, "He had made the wrestling team but couldn't be on it because of his grades."

On Dec. 14, another 17-year-old from Syracuse died of a self-inflicted gunshot wound to the chest. The boy left no notes to his parents and gave no indication why he would take his life, said Syracuse Police Chief John Gardner.

His family had gone to a church service in West Point and he was home by himself. Gardner said the boy used his own 12-gauge shotgun to take his life.

The youth, a neighbor of one of the earlier victims, had been a nominee for science scholarships.

Gardner thinks the deaths are unrelated.

Nancy Wright, the aunt of one of the victims and president of the Salt Lake County Medical Auxiliary, said, "It's frightening that when chains of things like this get started, other students follow. It makes parents nervous."

Wright, mother of three children, said it's time parents ask themselves, "What are we doing to our kids? Are we insisting they be top scholars, top athletes, superstars? Is there room in this world to be just an average kid, or are we putting too much pressure on kids to conform to what everyone else does?"

To help teachers identify signs of drug abuse, thoughts of self-destruction and other problems, Clearfield High School Principal David Lawrence Cook recently brought a counselor to the school from Benchmark Hospital.

Cook also was instrumental in bringing Gill to the school to meet with students coping with their classmates' deaths. After the first of the year, he'll invite parents feeling the stress of the deaths to the school to meet with the counselor and learn what mental health services are available in the community.

In the meantime, Cook said, they are trying not to dwell on the deaths, "which we do not know for certain were self-inflicted." Instead, the principal said he is trying to create a happy atmosphere in the school and Friday played for the students the film strip "The Best Days of Your Life — High School."

"Our job is education," he stressed.

Garage doors closed, family car started, and Becky became 1 of 6 teenage victims

By JoAnn Jacobsen-Wells
Deseret News staff writer

WEST POINT — It has been 28 days since 17-year-old Rebecca Sue Fisher shut the garage doors and started her family's car — becoming one of six northern Utah teens to end their own lives in the past two months.

Her father, Fred Fisher, a counselor at Davis High School, and her mother, Dixie, are still confused and don't really know what to do — what not to do. They blame themselves for their daughter's death. "There are so many things we could have done, had we known."

known."

What they knew was that their Becky was a pleasure in their home, a happy-go-lucky girl most of the time. In many ways, she was a normal teenager, wanting to be with her friends most of the time, instead of with her family, and planning the day when she would be out on her own. She had a bureau full of kitchen equipment she was saving for her own apartment.

Sure, Fisher said, his daughter had some problems over the past year — stresses most teenagers have to cope with. She was working at a fast-food drive-in after school until 1 or 2 a.m., then getting up to go to school by 7:30 a.m. So, she was tired a lot.

Becky had also been frustrated because her three closest friends, Clearfield High students, had moved away in the past three years. Because that upset her quite a bit, her folks persuaded her to go to Davis High. But she found the move difficult in her senior year, and wanted to return to Clearfield.

Becky was adopted when she was 6 days old. Fisher said they told her about it at an early age and did not think it bothered her, until one day in his office at Davis High, he had a good talk with his daughter. "She said she was mad at God for letting her friends go away, because she had made no new friends at Davis and because she was adopted." The parents found out later that she had confided in her friends that the "adoption thing" really bothered her.

The teenager maintained she had no interest in going to college, but Fisher said while she was at Davis High she got involved in a tutor program at Columbia Elementary that changed her mind about earning a higher degree. She was so excited about the program that she continued it when she transferred back to Clearfield even though it was a long drive to the elementary school in Kaysville. She wanted to be with the children. Her new goal was to become an elementary school teacher.

Her parents thought her attitude was improving. She had a boyfriend and new friends. "We were shocked and bewildered that she was in as much trouble as she was," Fisher said. "We knew she had pressures but thought she was doing better, even though she was pushing herself."

On Dec. 1, Becky pushed herself too far.

That morning, when her father went to awaken her, she was a bit ornery — perhaps even a little violent. But when she had became moody in the weeks before her death, the Fishers said they were told not to worry, she was just behaving like a typical teenager.

Nevertheless Fisher decided on the way to work that he'd have a good talk with his daughter when he got home. He never got the chance.

After having breakfast with a friend, Becky returned home that

friend, Becky returned home that

morning to get her books for her tutoring assignment. She brushed her teeth and picked up the teddy bear she slept with every night. Then she drove the car into the garage and shut the garage door.

"I don't think she meant to go all the way. She was just very tired, put her head down, went to sleep and it overcame her," her distraught father said.

Becky's 16-year-old brother Cory found his sister in the vehicle at 2:15 p.m. The car door was open; her feet were hanging out. "I hope she was trying to get out," Fisher said. "But it was too late."

Cory immediately called his mother at the nearby bank where she works. They called an ambulance.

Fisher arrived home soon after and tried frantically to give his young daughter mouth-to-mouth resuscitation. The paramedics also tried to revive her. But they said she had been dead for two hours. There was nothing anyone could do.

Now members of her family are trying to fill their minds with the good memories of Becky. Unfortunately, the memories of her in the garage continue to haunt her father.

It's especially hard for them this time of year when they go Christmas shopping. Fisher said they always see sweaters and things that they would normally buy for Becky.

The teenager left no note, gave no impassioned plea for help, nothing.

There's no way her family can understand or explain what happened.

"I think she just got very, very tired and upset about a few things and didn't realize how final it was," Fisher said. "She didn't realize how this would affect her family and friends.

"It's devastating — her death has left us very bewildered and hurt."

Outpatient program treats those with eating disorders

MURRAY — Cottonwood Hospital's Eating Disorders Unit has opened an outpatient program for those who cannot be hospitalized but are in need of treatment.

Therapy is offered by appointment. For information, call 269-2400.

21 Dec 1986

Teen suicides baffle officials

CLEARFIELD, Utah (AP) — Authorities say they are bewildered over the suicide deaths of five teenagers in and around this northern Utah community since November.

Law-enforcement officials agree there is no apparent link between the deaths, but are, along with family and friends of the victims, stunned by the tragedy.

"This is probably the highest concentration in a short period in a community this small that I've ever observed," said Dr. Noel Gill, Davis County Mental Health program coordinator for children and youth.

"I've been in Davis County for six years and nothing like this has came to my attention," he said.

Suicide, said sheriff's detective Glen Parker, has become a "mild epidemic in the north end of the county." Parker is investigating one of the deaths.

Sheriff's detective Colin Hart has been watching the trend not only in Davis, but in other areas, too. The problem was brought to his attention last Halloween when a Tremonton boy attempted to kill himself, he said.

Since November, four teenage boys have died as a result of self-inflicted gunshot wounds and a teenage girl died from carbon monoxide poisoning. All lived in the northwestern corner of Davis County, except one Roy student.

Three of the teenagers attended Clearfield High School, one attended Syracuse Junior High, and one was a student at Roy High School.

Authorities said they can only speculate on the reasons for the number of teenage deaths in the area.

Gill, who spoke at Clearfield High Wednesday, said there appeared to be no truth to a rumor at the school that students there were signing a suicide pact.

He said his information indicates the deaths have all been separate incidents. He said alcohol, drugs or heavy metal music don't appear, as some have suggested, to have played a part in the deaths.

"But it's really too early to speculate," he added.

Clinton Police Chief LeRoy Webb, who is investigating one of the gunshot deaths, said November and December are the months for suicides because of pressures of the holidays.

"You're required to be happy," he said.

Four of the suicides were boys, two 17 and two 15, and one a 17-year-old girl.

All but one of the boys shot themselves while at home in their rooms and two used their own shotguns. At least two of the teenagers were said to have had boy-girl relationship problems.

One had been rejected from the wrestling team because of bad grades, but another was an honor student. One had changed schools temporarily and then come back to Clearfield High, and another had just moved to the area from another city and was adjusting to a new junior high school.

Webb began investigating the first teenage death Nov. 9 when a 15-year-old Clinton boy shot himself with his shotgun while pheasant hunting. That particular incident, although ruled a suicide by the medical examiner, left many questions.

Webb said there was lack of strong evidence, such as a suicide note, deep depression, previous attempts or talk of suicide.

"There are still those who believe this to be an accident," he said.

But even discounting this one death, Webb said the suicide trend is scary.

"There have never been this many sui cides in this area before," he said.

A second death came two weeks later in West Point when the 17-year-old girl was found outside her home in a vehicle that had been left running. The cause of the girl's death was undetermined by medical examiners.

Parker said he could find no motive for suicide, but he said the girl reportedly had asked people questions about ways to kill herself.

The detective said he talked to counselors and students at Clearfield to find a clue as to why the girl might have resorted to suicide.

"It's a complex situation," he said. "Quite frankly, they don't know what in the hell to do."

A third death occurred Dec. 8 when a 15-year-old Clearfield boy shot himself with a rifle in a bedroom he shared with a younger brother. Both parents were out of town at the time, police said.

Clearfield Police Detective Dan Jones said the death occurred after the boy had finished a conversation with his sister and other family members about midnight.

A family member found the boy dead in his room about 7 a.m. Police found no evidence the boy was using drugs. The medical examiner's report said the death was a self-inflicted gunshot wound.

Provo Herald

Girl's suicide

WEST POINT, Utah (AP) — No suicide note, no impassioned plea for help; nothing. When Becky Sue Fisher shut the garage doors and started her family's vehicle Dec. 1, she opened doors of anguish that may never be closed.

When Becky Sue Fisher shut the garage doors and started her family's vehicle Dec. 1, she became one of five northern Utah teens to end their own lives in the past two months, and she opened doors of anguish that may never be closed.

Fred and Dixie Fisher have been left with haunting, unanswered questions as they search their home and Becky's belongings for some reason.

Becky, a senior at Clearfield High School, was remembered as a happy-go-lucky person; always pleasant, always smiling.

Her life was not too different from many of her friends and fellow students. She often

WASATCH CITY-COUNTY HEALTH DEPARTMENT

805 WEST 100 SOUTH
HEBER CITY, UTAH 84032
PHONE (801) 654-2700

December 23, 1986

DEAR DR. GREEN,

DUE TO THE CELEBRATION OF MARTIN LUTHER KING'S BIRTHDAY ON JANUARY 19th, WE HAVE SCHEDULED OUR NEXT BOARD MEETING FOR MONDAY, JANUARY 12th AT 12:00 NOON IN THE COUNTY SERVICES COMPLEX. I HOPE THIS WILL NOT INCONVENIENCE YOU.

YOUR WILLINGNESS TO SERVE IS GREATLY APPRECIATED.

HAVE A HEALTHY, HAPPY HOLIDAY.

Nelda

BOARD OF HEALTH AGENDA
January 12, 1987

WELCOME
INVOCATION
NEW BOARD MEMBERS
APPROVAL OF MINUTES
ALCOHOL/DRUG REPORT
MENTAL HEALTH REPORT
SCHOOL HEALTH REPORT
WIC

NURSE REPORT

- IMMUNIZATION
- HYPERTENSION
- OTHER:

HEALTH OFFICERS REPORT

- BUDGET
- LEGISLATIVE ISSUES
- MINE TAILINGS
- SCHEDULE MEETINGS FOR 1987
- BOARD OF HEALTH MANUAL
- RESTAURANT RE-STANDARDIZATION
- RESTAURANT EX-OFFICIO MEMBER TO BOARD
- LIABILITY INSURANCE
- WALLSBURG ESTATES

Please notify us if you have any agenda items. Thank You.

Dr Green,
I plan to put this article in the WAVE and I was wondering if you would just review it to see if anything needs added or deleted
Thank you
Sue Barker

HIB VACCINE

Hib stands for Haemophilus Influenzae type b which is a bacterium that is the cause for many children's infections. Hib hits one child in every 200 in the U.S. before the age of two. Hib is responsible for over half of all the cases of meningitis. Meningitis is an inflammation of the membranes of the spinal cord of brain and is the leading cause of acquired mental retardation. Of all the children who develop Hib meningitis between 5-10% will die. Many of those who survive will have lasting damage to the nervous system.

Ninety percent of all the cases of epiglottitis is caused by the Hib bacterium. Epiglottitis is an inflammation of the epiglottis and is a medical emergency that may cause the child to choke to death if no treated immediately.

Hib also is the major cause of joint infections in children which is a potentially crippling form of arthritis.

One child can make other children ill if he has a serious Hib disease. It is getting more difficult to treat Hib diseases with antibiotics due to the fact that Hib bacterium has become more resistant to antibiotics. So as a health department our best hope is to prevent disease from Hib.

When the Hib vaccine is injected into the body the body develops substances called antibodies that protect the body from diseases. Antibodies are in the blood that attack and kill bacteria and viruses. Babies are born with antibodies that they acquired from their mother but they only protect the baby for the first few months of life. Then the childs body must start producing his own antibodies.

Young children have immature antibody producing systems and may not be able to begin making enough antibodies against Hib until age 2-3.

Vaccines teach the body how to make specific antibodies--yet they don't cause the sickness. The Hib vaccine teaches the childs body to develop antibodies to fight Hib.

U.S. Public Health Services and American Academy of Pediatrics recommend that all children receive the Hib vaccine at 24 months of age.

Children in nursery school, day care centers and kindergarten come in close contact with so many children that they are at particularly high risk for developing a serious disease from Hib. You may therefore consider vaccination from 18-23 months of age although the vaccine is less likely to be as effective and you would have to return your child at age 24 months to receive a booster Hib vaccine for continued protection.

If you have any further questions contact your physician or Wasatch City-County Health Department at 654-2700. Hib vaccine is now available at the Wasatch City-County Health Department for $7.00 a dose charge. The immunization clinics are the first Thursdays of each month from 10-1 p.m. and the third Thursday of each month from 5-7 p.m.

UTAH DEPARTMENT OF HEALTH
PROMOTE PROTECT PREVENT

Norman H. Bangerter
Governor

Suzanne Dandoy, M.D., M.P.H.
Executive Director

SMOKING AND WOMEN CONFERENCE
FRIDAY, FEBRUARY 6, 1987
8:00 - 4:00 P.M.
SHERATON TRIAD

What are the factors influencing females to smoke? How should health professionals plan and implement smoking cessation programs for pregnant women? What is the value of worksite cessation programs? How can physicians and dentists counsel patients for smoking cessation? These questions and many others will be answered during the Smoking and Women Conference sponsored by the Utah Department of Health, American Lung Association, American Heart Association, and American Cancer Society. The conference will be held Friday, February 6 from 8-4 p.m. at the Sheraton Triad in Salt Lake City.

As keynote speaker, Richard Windsor, Ph.D., M.P.H., Professor, School of Health Behavior, University of Alabama, Birmingham (also, Pricipal Investigator for the 1986-1991 NCI Grant - Smoking Cessation Intervention Trial for Pregnant Women) will address "Smoking and Women in the '80s". During one of four afternoon workshops, Dr. Windsor will facilitate "How to Plan and Implement Smoking Cessation Programs for Pregnant Women". Recently, Dr. Windsor co-authored a review and critique of smoking cessation intervention research among pregnant women. (Health Education Quarterly, Summer 1986)

Addressing "Factors Influencing Adolescent Smoking" during a morning panel discussion will be Carol D'Onofrio, Dr.Ph., Associate Professor, UC Berkeley, School of Public Health. Dr. D'Onofrio will present "Teen Prevention Programs Nationwide" during an afternoon workshop.

Additional conference topics will include: Trends in Female Smoking Patterns, Smoking and Female Cancer Rates, Physician/Dentist Cessation Interventions, and Value of Worksite Cessation Programs and Incentives. A General Session, "How Professionals Can Impact Female Smoking Rates in Utah" will conclude the conference. Participants will brainstorm concepts gained from the afternoon workshops.

If you have an interest in updating your knowledge base about female smoking, reviewing smoking cessation programs, or enhancing your smoking prevention curriculum, I recommend you spend Friday, February 6 at the Sheraton Triad. This conference will teach you effective techniques to impact female smoking prevalence in Utah.

During the first week of January, you will be receiving a registration form and the complete conference agenda. The conference fee will be $30. Please call me (538-6120) if you have further questions.

Hope you'll be there!

Chris Chalkley

Christine Chalkley, Coordinator
Tobacco Risk Reduction Program

CC:cmd

J. Brett Lazar, M.D., Director • Division of Community Health Services

288 North 1460 West • P.O. Box 16700 • Salt Lake City, Utah 84116-0700 • (801) 538-6129

Wasatch City/County Health Department Schedule

March

3 — WIC (by apointment
Water Samples in by 11 a.m.
4 — WIC — Early Pregnancy Class, 10 a.m.-1:30 p.m.
5 — Immunization Clinic, 10 a.m. to 1 p.m.
Blood Pressure Clinic 2 to 4 p.m.
6 — Well Child Clinic (by appointment)
10 — WIC (by appointment)
11 — WIC — Nutrition Education Class, 10 a.m.-1:30 p.m.
12 — Well Child Clinic (by appointment)
16 — Board of Health monthly meeting, 12 noon
17 — WIC (by appointment)
Water Samples in by 11:30 a.m.
18 — Early Pregnancy Class, 7 p.m.
20 — Well Child Clinic (by appointment)
24 — Food Handlers Class, 5 p.m.
26 — Well Child Clinic (by appointment)

26 Feb 1987